A172

Rugged Compact PC

- **Rugged Reduced SWaP PC**
- **Flexible Configuration Options**
  - CPU
  - Memory
  - Mass Storage
  - OS
- **I/O Interfaces**
  - Gigabit Ethernet
  - Serial Ports
  - USB 2.0
  - Stereo Audio Input + Output
  - Discrete I/O
  - DVI Output
  - CANbus
  - Composite Video Input + Output
- **Mini PCIe Slot for I/O Expansion**
- **Wide Input Voltage Range**
- **MIL-STD-704 and MIL-STD-1275 Compliant**
- **D38999 I/O and Power Connectors**
- **Operating System Support**
  - Windows®
  - Linux®
  - VxWorks®
- **Environmentally Sealed (IP65)**
- **Natural Convection Cooled**
- **Compact and Lightweight**
- **50 ms Holdup Time (option)**
- **Removable Mass Storage (option)**

A172

Rugged Compact PC

Aitech's A172 Rugged Compact PC (RCP) is a small, low power, high performance, rugged computer, suitable for any application that requires a high performance reliable RCP.

The A172 is designed around a standard COM Express (Type 6) module, which contains the system CPU and SDRAM, and provides a number of standard I/O interfaces.

The COM Express module is hosted on an Aitech main board, which provides additional I/O interfaces, and includes two mini SATA (mSATA) sites and two mini PCIe sites.

The mini SATA sites can accommodate standard SSD modules for system Flash mass storage and the mini PCIe slots can accommodate standard modules to provide additional system functionality.

The usage of standardized modules (COM Express, mini PCIe, and mini SATA) in the A172 design enables Aitech to build customized versions of the system to meet specific customer requirements (contact your Aitech representative for additional information), and also allows Aitech to offer updated system configurations as newer modules become available.

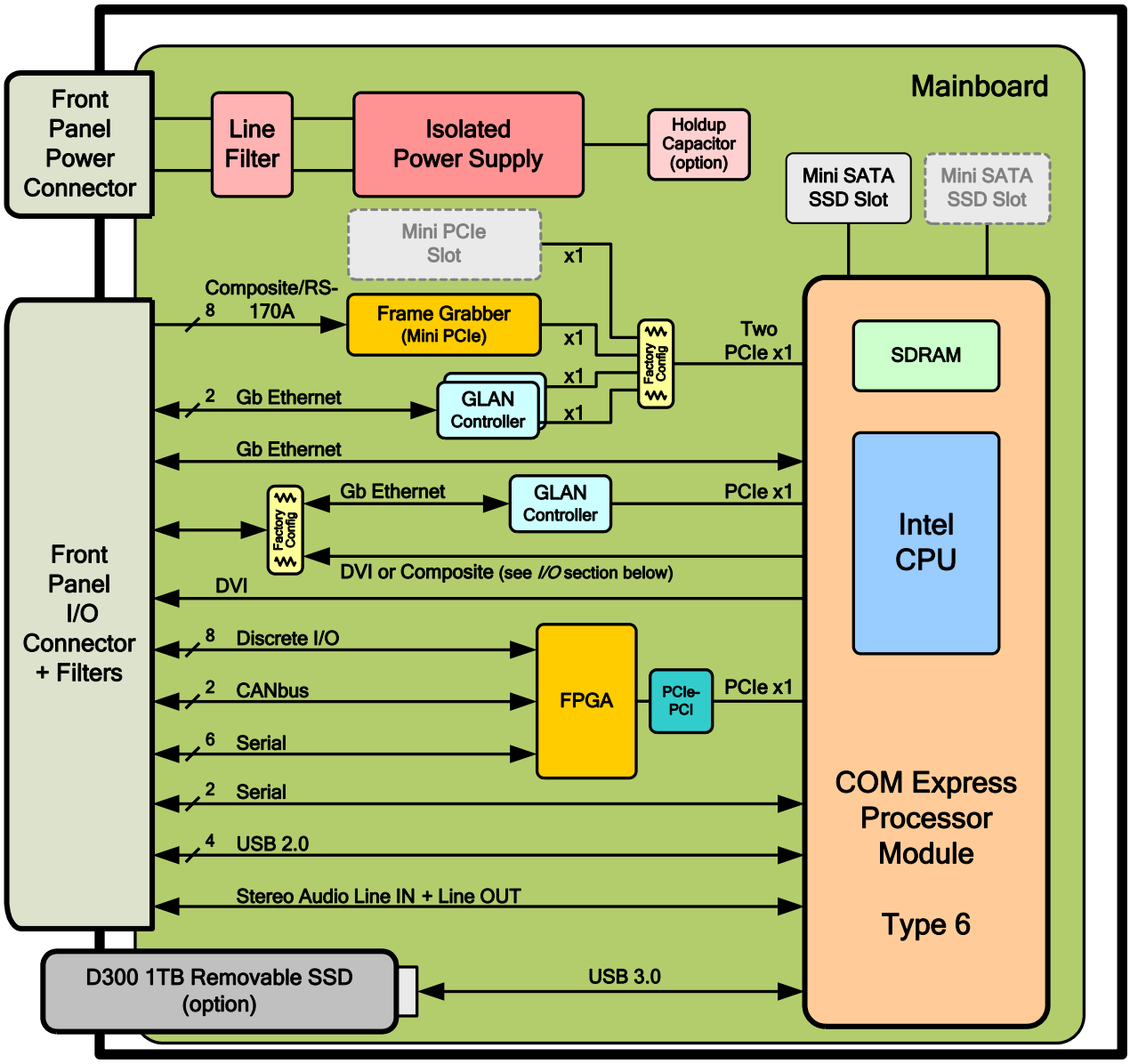

A172

Rugged Compact PC

COM Express Module

Model	CPU	Memory	OS Support (3)	TPM	Power
A172B	Intel XEON E3-1505L v6 (7th Gen) • 4 Cores/8 Threads • 2.2 GHz Base Frequency • 3.0 GHz Turbo Frequency • HD Graphics P630 (Gen 9) • PassMark Score: 7887	DDR4 (with ECC) @ 1600 MT/s Ordering Options: • 16 GB Single Channel • 32 GB Dual Channel	Windows 10 64-bit Linux	2.0	• Minimum: 15 W (1) • Typical: 45 W (2)
A172C	Intel Core i7-7600U (7th Gen) • 2 Cores/4 Threads • 2.8 GHz Base Frequency • 3.9 GHz Turbo Frequency • HD Graphics 620 (Gen 9) • PassMark Score: 5595	DDR4 (non-ECC) @ 1600 MT/s Ordering Options: • 16 GB Single Channel • 32 GB Dual Channel	VxWorks 7.0 Windows 10 64-bit Linux	2.0	• Minimum: 12 W (1) • Typical: 30 W (2)
A172T	Intel Core i7-1185GRE (11th Gen) • 4 Cores/8 Threads • 1.2 GHz TDP-down Base Frequency • 1.8 GHz Base Frequency • 2.8 GHz TDP-up Base Frequency • 4.4 GHz Turbo Frequency • Iris® Xe Graphics (Gen 11) • PassMark Score: 9142	DDR4 (non-ECC) @ 1600 MT/s Ordering Options: • 32 GB Dual Channel • 64 GB Dual Channel	Windows 10 64-bit Linux	2.0	• Minimum: 15 W (1) • Typical: 45 W (2)

Notes:
(1) Windows idle
(2) Windows running TAT (Thermal Analyses Tool) to exercise all CPUs to 80% load and Integrated Graphics Processor (IGP) to 70%
(3) Other operating systems may be partially supported, and additional driver porting may be available per customer request, depending on system configuration (contact an Aitech representative for more information)

Memory Resources

RAM	Options determined by selected COM Express module (see the *COM Express Module* section above)
On-Board SATA SSD	Mini SATA SSD with Quick Erase and Secure Erase feature options (standard on-board SSD options are listed in *Ordering Information* below, additional options may be available per customer request, contact an Aitech representative for more info)
Removable SSD	Optional Aitech D300 Removable SSD (see *Ordering Information* > *Special Options*) See the D300 datasheet for more information on the removable SSD

A172

Rugged Compact PC

I/O

	I/O Variant (1)	
	Variant #1	**Variant #3**
Gigabit Ethernet (1000Base-T)	4(6)	2(6)
DVI Outputs (Single Link)	1	2
Composite Video Inputs Supports RS-170A (NTSC)/PAL (auto detected) and simultaneous capture of all channels at full frame rates (5)	–	8
Composite Video Outputs Supports PAL (RS-170A [NTSC] support may be available via factory configuration per customer request, contact an Aitech representative for more information)	1	–
Serial Ports UART 16550 compatible	8 x RS-232 / 2 x RS-422 + 2 x RS-422/485 (2) (3)	
Discrete I/O (Single-Ended)	8 x Input/Output (software configurable)	
CANbus (4) Independent, isolated CAN 2.0B compatible interfaces, bit rates up to 1 Mb/s, PeliCAN operation mode support	2	
USB 2.0	4	
Stereo Audio Line IN	1	
Stereo Audio Line OUT	1	
RGBHV Output	N/A (available only per customer request, contact an Aitech representative for more information)	
WiFi		

Notes:
(1) A172 I/O Variants offer different combinations/quantities of I/O via factory configuration; additional I/O options may be available per customer request (contact an Aitech representative for more information)
(2) Four pairs of serial ports are provided:
- Each pair is software configurable as two RS-232 ports or one RS-422 port
- Two of the four pairs are also individually software configurable as one RS-485 port
(3) RS-422/485 serial port terminations are not installed by default
(4) CANbus terminations are installed by default
(5) Depending on system OS driver
(6) On A172T one Ethernet port supports TSN (Time Sensitive Networking) client

Enclosure Options

Standard	Default enclosure type, used when Hold-Up capacitor bank and/or removable SSD are not included
Extended	Slightly larger enclosure, used when Hold-Up capacitor bank and/or removable SSD are included Includes more internal room to accommodate Hold-Up capacitor bank and removable SSD, and also provides a door which allows access for installation/removal of the removable SSD

Mechanical

	Standard Enclosure	Extended Enclosure
Dimensions	260 x 180 x 46 mm [10.24 x 7.09 x 1.81"]	286 x 180 x 61 mm [11.26 x 7.09 x 2.41"]
Weight	<2.25 kg [5 lb]	<2.90 kg [6.4 lb]

A172

Rugged Compact PC

Power

- Wide input voltage range
  - 10 – 32 V_{DC} steady state operation
  - 12 V_{DC} turn-on threshold
- Input reverse polarity protection (up to 32 V_{DC})
- EMI/RFI input filter
- On-board supplies isolated from external supply
- MIL-STD-704 and MIL-STD-1275 compliant
- 50 ms Holdup Time (optional – see *Ordering Information* > *Special Options*)

Environmental

Operating Temp.	-40 to +70 °C (1)
Non-Operating Temp.	-55 to +100 °C
Vibration	V2 per VITA 47
Operating Shock	OS1 per VITA 47
Altitude	-1,500 to +60,000 ft. (2)
Relative Humidity	0 – 100%
Fungus	Fungus Resistant

Rain	MIL-STD-810F, Method 506.4, Procedure III
Dust	MIL-STD-810F, Method 510.4, Procedure I & II
Salt Fog	MIL-STD-810F, Method 509.4
Bench Handling	MIL-STD-810F, Method 516.5, Procedure VI
Ingress Protection	IP65 (3)
EMI/RFI	MIL-STD-461

Notes:
(1) CPU throttling may occur depending on CPU usage and temperature
(2) Depending on temperature and system power dissipation
(3) With appropriate connections to system I/O and power connectors

A172

Rugged Compact PC

Ordering Information

CPU
B = Xeon E3-1505L (Gen 7)
C = Core i7-7600U (Gen 7)
T = Core i7-1185GRE (Gen 11)

On-Board SATA SSD (4)
7 = 512 GB MLC (Q S D)

Operating System (1)
0 = None
1 = VxWorks
2 = Windows
3 = Linux
9 = Custom

Special Options
0 = None
1 = 50 ms Hold-up(3)
2 = 1 TB MLC Removable Mass Storage(3)
3 = 50 ms hold-up + 1 TB MLC Removable Mass Storage(3)

2 A172 [ ] - [ ] [ ] [ ] [ ] [ ] [ ] - [ ] [ ]

Ruggedization
2 = Rugged

SDRAM (1)
C = 16 GB
D = 32 GB
E = 64 GB

I/O Variant (2)
1 = Variant #1
3 = Variant #3
9 = Custom

RoHS
L = Leaded
R = RoHS6 compliant (MOQ=50)

Configuration No.
To be assigned by Aitech

Example: 2A172T-D710L0-00

Notes:
(1) Refer to the *COM Express Module* table for available options for each module
(2) Refer to the *I/O* table for I/O combinations per Variant
(3) Note differences in dimensions and weight when selecting these options
(4) Q = Quick Erase; S = Secure Erase; D = Destroy - using ATA Commands.

Optional Accessories

MCS172-1-00 *	Set of Front Panel Mating Connectors for I/O Variant 1
MCS172-3-00 *	Set of Front Panel Mating Connectors for I/O Variant 3
PSA-90W	90 W Power Supply
2D300-01M0-00	1 TB Removable Mass Storage
TCA172-SK *	A172 Starter Kit comprising: • J1 Power Cable • J2 I/O Cable (1 x Serial, 1 x DVI, 2 x USB, 1 x GLAN, Audio Output)
A172 Custom Cable	Ask your Aitech sales representative

* Add "-CF" to part number for cadmium free (e.g.MCS172-1-00-CF)

Contact Aitech

Contact your Aitech sales representative for additional product information, and for inquiries regarding customized configurations of the A172 and additional software support.

All names, products, and/or services mentioned are trademarks or registered trademarks of their respective holders.
All information contained herein is subject to change without notice.